DALI+Push+Phase Cut+0/1-10V LED Dimmer

70160001

Important: *Read All Instructions Prior to Installation*

Function introduction

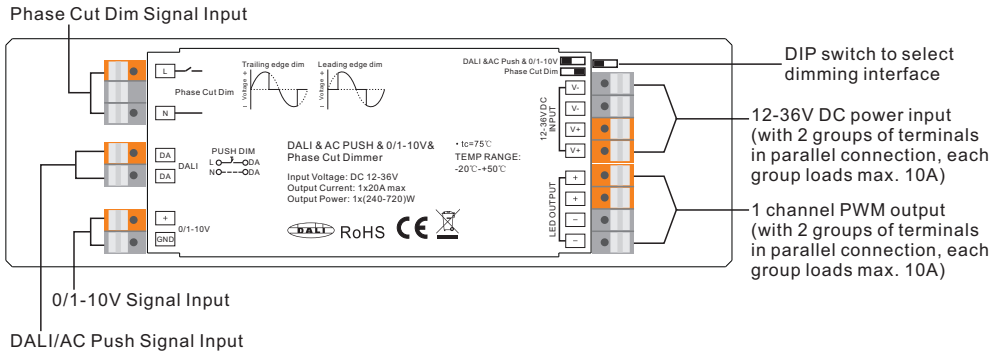

Product Data

Input Voltage	Output Current	Output Power	Remarks	Size(LxWxH)	Dimming Input	DALI Consumption	Dimming Range	Ambient Temperature
12-36VDC	1x20A	1x(240-720)W	Constant voltage	170x53.4x28mm	DALI&AC Push& 0/1-10V&Phase Cut	2mA	0.1%-100%	-20℃ ~ +50℃

- Multifunction 4 in 1 LED Dimmer, with DALI, AC push, 0/1-10V and Phase Cut dimming interfaces
- In compliance with IEC 62386-101:2014, IEC 62386-102:2014, IEC 62386-207 Ed2.
- Built-in DALI-2 interface, DALI DT6 device
- Match all DALI systems in the market
- Dip switch to select different dimming interfaces
- 1 channel 12-36VDC output, max. 20A
- Supports both leading edge and trailing edge dimming input
- 1 DALI address assigned by DALI master
- Compatible with universal phase cut dimmers
- To work with power repeater to expand output power unlimitedly.
- Waterproof grade: IP20

Safety & Warnings

- DO NOT select dimming input with power applied to the device.
- DO NOT install with power applied to device.
- DO NOT expose the device to moisture.

Operation

DIP Switch to Select Dimming Input

Before wiring, please first select dimming input interface by DIP switch depending on the control system used. Different dimming interfaces can not be wired and used simultaneously. Only 1 of the 4 can be selected and wired at a time.

DALI Address Assigned by DALI Masters

While select DALI dimming input, DALI address can be assigned by DALI Master controller automatically, please refer to user manuals of compatible DALI Masters for specific operations.

Wiring Diagram

1. With DALI Bus

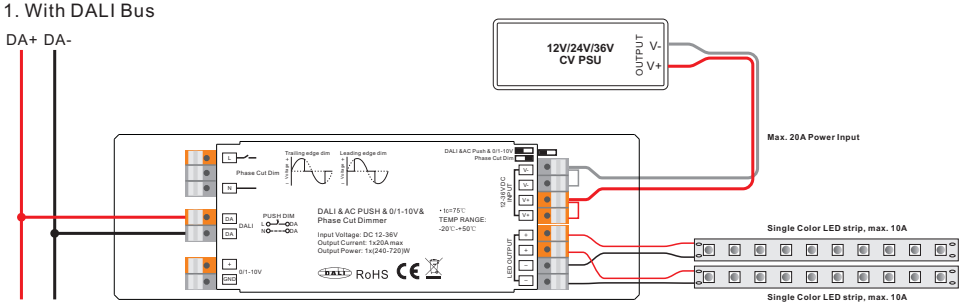

2. With AC Push

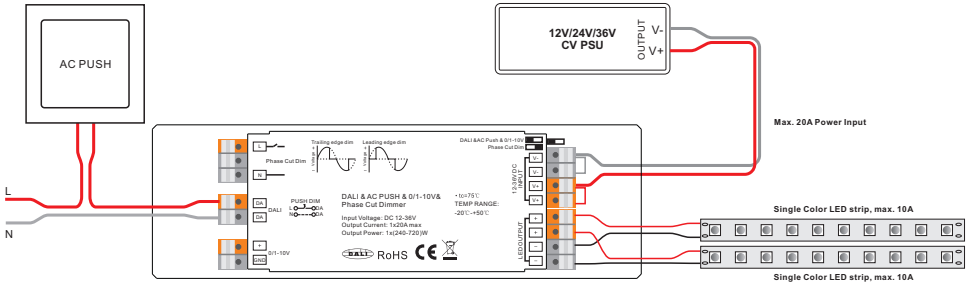

Note: the Push Dim input voltage range is 100-240VAC.

3. With 0/1-10V

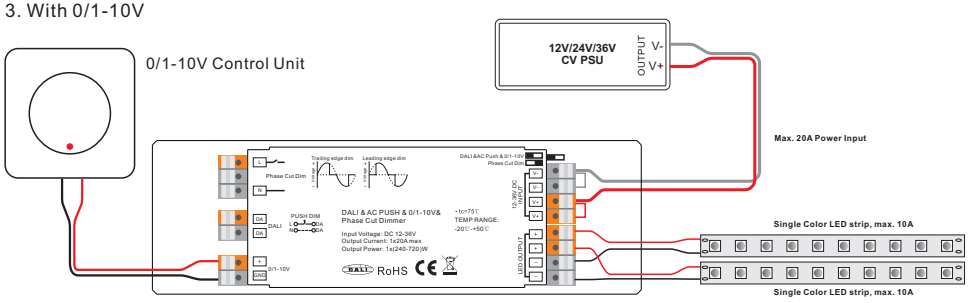

4. With Phase Cut Dim

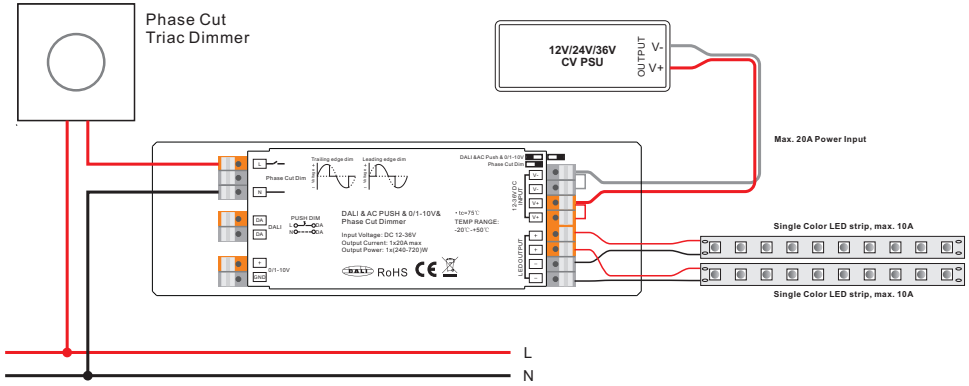

Note: the Phase Cut Dim input voltage range is 100-240VAC.
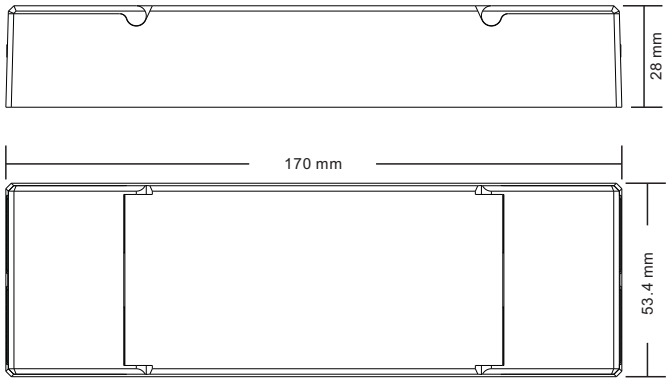
Product Dimension